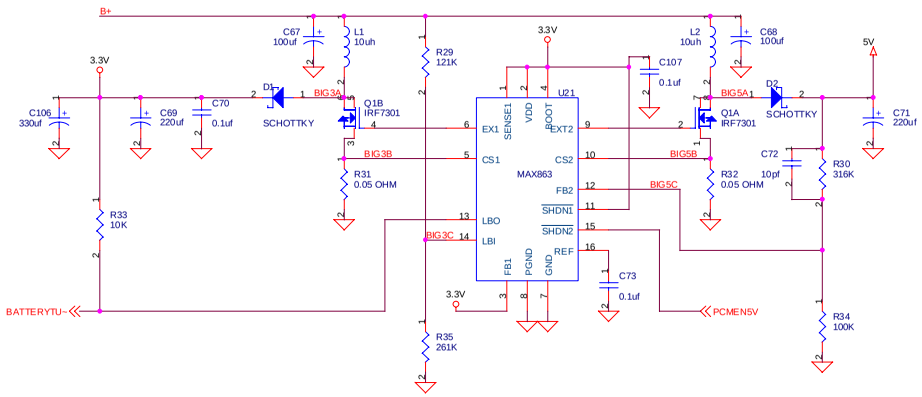

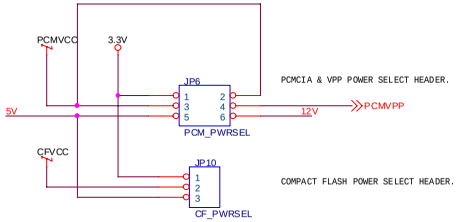

PCMCIA & VPP POWER SELECT HEADER.

COMPACT FLASH POWER SELECT HEADER.

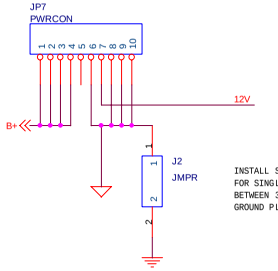

INSTALL SHORTING STRAP ACROSS J2 FOR SINGLE GND CONNECTION POINT BETWEEN 3.3V AND PROCESSOR CORE GROUND PLANES.

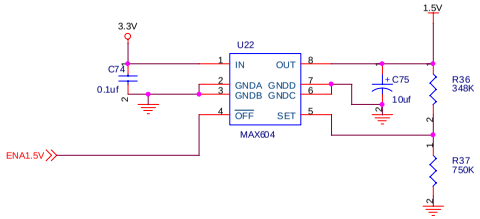

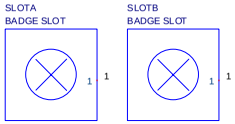

Title	Badge4 Power MTS 2000	
Size C	Document Number 000000	Rev 1.0
Date: Wednesday, September 12, 2001	Sheet 1 of 5	