Inverse Problems **16** (2000) 1053–1070. Printed in the UK PII: S0266-5611(00)08372-6

# Reconstructing planar domains from their moments

Björn Gustafsson†, Chiyu He‡, Peyman Milanfar§ and Mihai Putinar‡

† Mathematics Department, The Royal Institute of Technology, Stockholm, S-10044 Sweden
‡ Mathematics Department, University of California, Santa Barbara, CA 93106, USA
§ Electrical Engineering Department, University of California, Santa Cruz, CA 95064, USA

E-mail: gbjorn@math.kth.se, he@math.ucsb.edu, milanfar@cse.ucsc.edu and mputinar@math.ucsb.edu

Received 1 October 1999, in final form 16 May 2000

**Abstract.** In many areas of science and engineering it is of interest to find the shape of an object or region from indirect measurements which can actually be distilled into moments of the underlying shapes we seek to reconstruct. In this paper, we describe a theoretical framework for the reconstruction of a class of planar semi-analytic domains from their moments. A part of this class, known as *quadrature domains*, can approximate, arbitrarily closely, any bounded domain in the complex plane, and is therefore of great practical importance. We provide an exact reconstruction algorithm of quadrature domains. Some numerical demonstrations of the proposed algorithms will be presented. In addition, relations of the present theory to computer-assisted tomography and a geophysical inverse problem will be briefly discussed.

## 1. Introduction

The theoretical subject of this paper is the truncated $L$ problem of moments in two variables and some of its ramifications. The practical aspects of the paper are centred around the reconstruction of a planar domain (with possible degrees of shade) from a partial set of data, such as x-rays taken along some given directions.

The one-variable moment problem with a weight uniformly bounded from below and from above was considered by A A Markov beginning in 1883 with his proof of the Chebyshev inequalities and in the consequent derivation of the law of large numbers from them. This century, the same moment problem, nowadays known as the $L$ problem, was thoroughly investigated by M G Krein, N I Akhiezer and their collaborators. From our late twentieth century perspective, we can trace back a good portion of the fundamental results of the theory of convex sets or early functional analysis to this problem. An excellent account of these facts is available in the monographs [3, 18]. Moreover, it was M G Krein who related in the 1950s the known solutions and techniques connected with the $L$ problem to the perturbation theory of quantum mechanical Hamiltonians, more specifically to the theory of the phase shift of a pair of self-adjoint operators. Later, the same techniques proved to be essential in best approximation results and key lemmas in the control theory of linear systems, cf [7].

The analogous two-dimensional $L$ problem is much less explored. This dimensional generalization has to do with the distribution of pairs of random variables [6], or the logarithmic potential of a planar domain, or the distribution of stress of an elastic membrane, and so on. Recent works point out some direct applications of this problem to tomography or geophysics, see [9, 20, 21, 30]. The difficulties are of a different nature, although the basic moment theory

  

is essentially unchanged. A parallel correspondence between Krein's interpretation of the $L$ problem on the line, via the perturbation theory of self-adjoint operators, was recently proposed in [24]; this time, the $L$ problem was interpreted as the inverse problem for the principal function of a pair of self-adjoint operators with trace-class commutator. This dictionary provides a simple solution to the $L$ problem in the plane, and gives the technical tool (a formal exponential transform of the moment sequence) in reconstructing a domain from its moments, see also [12, 13, 23].

A dictionary discovered recently identifies a well-studied class of algebraic planar domains (known as quadrature domains) with a distinguished part of the extremal solutions of the truncated $L$ problem of moments. This brings into the field powerful methods of potential theory, complex analytic functions and even partial differential operators with analytic coefficients. The class of quadrature domains was introduced by Aharonov and Shapiro [1] and extensively studied by Sakai [28], Gustafsson [10] and several other mathematicians (for more details see the monograph [29]). The reconstruction algorithm we propose in the following is exact on all quadrature domains. Since every planar domain can be approximated by a sequence of quadrature domains [10] the remaining question is only how well and how constructive this approximation is from the perspective of moment sequences.

A theoretical continuation of this work is considered in [25], where a connection between the approximation process involved in this paper, the diagonal Padé approximation in two complex variables, and some finite-rank approximations of linear Hilbert space operators is developed.

This paper is organized as follows. The next section briefly recalls the convexity theory behind the truncated $L$ problem of moments (amply developed in [17]) and some basic aspects of the theory of quadrature domains. Section 3 deals with a linear parametrization of quadrature domains; a territory where block Jacobi type matrices, planar quadrature formulae and elementary operator theory meet. In section 3 we explicitly state and comment on the reconstruction algorithm for quadrature domains. Section 4 contains the reconstruction algorithm for simply connected domains with smooth real analytic boundaries, and a proof of its exponential convergence. In section 5 we briefly comment on some application areas, specifically in tomography and geophysics, and from the theoretical point of view, in cubature formulae on quadrature domains. Some numerical examples of the proposed reconstruction algorithms are appended (in section 6) at the end of the paper. We end with some general concluding remarks.

The authors are grateful to the three anonymous referees for their criticism and constructive comments.

## 2. Domains finitely determined by their moments

This section is a brief overview of some known results, old or new, concerning the $L$ problem of moments in two dimensions. Let $g$ be a measurable function defined in the complex plane $\mathbb{C}$, with support contained in a fixed ball $B_R(0)$, centred at zero of radius $R$. Throughout this paper we assume that $0 \leqslant g \leqslant 1$, almost everywhere. The coordinates in $\mathbb{C}$ will be denoted by $z = x + \mathrm{i}y$ and $\mathrm{d}A$ will be the Lebesgue area measure. The characteristic function of a measurable set $\sigma$ will be denoted by $\chi_\sigma$.

The moments of the function $g$ are

$$a_{mn} = \int_{\mathbb{C}} z^m \bar{z}^n g(z)\,\mathrm{d}A(z), \qquad m, n \in \mathbb{N}. \tag{1}$$

Fix a positive integer $N$ and denote by $a_N(g)$ the partial sequence of moments:

$$a_N(g) = \{a_{mn}; m, n \leqslant N\}. \tag{2}$$

We can regard $a_N(g)$ as a vector in $\mathbb{C}^{2N+2}$. Let

$$\Sigma_N = \{a_N(g); g \in L^\infty(B_R(0)),\ 0 \leqslant g \leqslant 1\}$$

be the set of all possible moments of such functions. Then an elementary argument shows that $\Sigma_N$ is a closed convex subset of $\mathbb{C}^{2N+2}$. An early result in convexity theory identifies the extremal elements of this set, as follows.

**Theorem 2.1.** *A point $a \in \Sigma_N$ is extremal if and only if there exists a real polynomial $p(z, \overline{z})$, of degree less than or equal to $N$ in each variable, so that $a = a_N(\chi_{\{p>0\}})$.*

Moreover, the extremality assumption implies the following uniqueness result.

**Corollary 2.2.** *Given a point $a \in \Sigma_N$, there exists a unique representing function $g$, in the sense $a = a_N(g)$, if and only if $a$ is an extremal point of $\Sigma_N$.*

The reader can find full details about these classical results in [18] or [17]. For the aims of this paper, it is important to rephrase the above corollary as: a function $g \in L^\infty(B_R(0))$, $0 \leqslant g \leqslant 1$, is uniquely determined by its moments of order $N$ in each variable if and only if it is of the form $g = \chi_{\{p>0\}}$, where $p$ is a real polynomial of degree less than or equal to $N$ in each variable. Moreover, for any point $a \in \Sigma_N$, there exists an extremal point $b \in \Sigma_{N+1}$ so that its projection onto the first $2N + 2$ coordinates coincides with $a$. Thus, in many respects, the investigation of the $N$-extremal solutions of the moment problem for functions $g$ as above is the key to understanding the whole moment problem.

In contrast to the one-variable case, so far there is no constructive way of passing from an extremal point $a \in \Sigma_N$ to its unique representative $\chi_{\{p>0\}}$, or equivalently to the defining polynomial $p(z, \overline{z})$. In what follows we focus on a particular class of extremal points of $\Sigma_N$, for which such a construction is possible.

Given a potential sequence of moments $a = (a_{mn})_{m,n=0}^\infty$, we define formally a new sequence $b = (b_{mn})_{m,n=0}^\infty$ by the following exponential transform:

$$1 - \exp\left(-\frac{1}{\pi}\sum_{m,n=0}^{\infty} a_{mn} X^{m+1} Y^{n+1}\right) = \sum_{m,n=0}^{\infty} b_{mn} X^{m+1} Y^{n+1}. \tag{3}$$

This notation will be consistently maintained throughout the whole paper.

By keeping track of the degrees in the unknowns $X, Y$, we rapidly remark that the transformation above is triangular, in the sense that, in the computation of $b_{mn}$, only the values of $a_{pq}$, $p \leqslant m, q \leqslant n$, are needed. The above transform was suggested by a central object (the determining function) in the theory of pairs of self-adjoint operators, cf [4]. Actually this operator theoretic framework solves our moment problem.

First we define a kernel $K(p, q; r, s) \in \mathbb{C}$, $p, q, r, s \in \mathbb{N}$, by the following inductive relations:

(a) $K(0, 0; p, q) = K(0, p; 0, q) = b_{pq}$,

(b) $\overline{K(p, q; r, s)} = K(r, s; p, q)$,

(c) $K(p + 1, q; r, s) = K(p, q; r, s + 1) + \sum_{k=1}^{p} K(p, q; k - 1, 0) b_{r-k,s}$.

Then the moment problem can be solved in familiar positivity condition terms, see [24] and the references to earlier works cited there.

**Theorem 2.3.** *Let $a = (a_{mn})_{m,n=0}^\infty$, $a_{00} > 0$, be a given sequence. Then there exists a function $g \in L^\infty(B_R(0))$, $0 \leqslant g \leqslant 1$, with these moments if and only if the kernels $K(p, q; r, s)$, $R^2 K(p, q; r, s) - K(p + 1, q; r + 1, s)$ are non-negatively definite.*

Implicit in the latter theorem is the condition $(b_{mn}) \geqslant 0$, where positivity is understood as a kernel defined on $\mathbb{N} \times \mathbb{N}$. Of particular interest is the degenerate case $\det(b_{mn})_{m,n=0}^{N} = 0$. This not only produces an extremal point of the set of all moments $\Sigma_N$, but it imposes on the defining polynomial $p$ some very rigid conditions, explained in the following paragraphs.

**Definition 2.4.** *A quadrature domain $\Omega$ is a bounded planar domain with the property that there exists a distribution $u$ of finite support, contained in $\Omega$, so that*

$$\int_{\Omega} f \, \mathrm{d}A = u(f), \qquad f \in L_a^1(\Omega). \tag{4}$$

The latter is the space of all analytic, integrable functions in $\Omega$.

This class of domains was singled out in [1]. To give the simplest example, a ball $B_r(0)$ satisfies the quadrature identity

$$\int_{B_r(0)} f \, \mathrm{d}A = \pi r^2 f(0),$$

for all analytic, integrable functions $f$ defined in $B_r(0)$.

In general, a quadrature domain $\Omega$ has a real algebraic boundary, given by a polynomial equation

$$\Omega \equiv \{z \in \mathbb{C};\ q(z, \overline{z}) < 0\}, \tag{5}$$

where the relation $\equiv$ means equality modulo a finite set. Moreover, the degree in each variable separately of the polynomial $q$ is equal to the number $N$ of points (counting also multiplicity) in the support of the distribution $u$. The integer $N$ is called the order of the quadrature domain $\Omega$. For all these and more details see [10] and [29].

Returning to our particular moment problem, we mention the following identification established in [23] and some earlier papers.

**Theorem 2.5.** *Let $g \in L^{\infty}(B_R(0))$, $0 \leqslant g \leqslant 1$, be a function with moments $a = (a_{mn})_{m,n=0}^{\infty}$. Then there exists a positive integer $N$ with the property $\det(b_{mn})_{m,n=0}^{N} = 0$ if and only if $g$ coincides up to a null set with the characteristic function of a quadrature domain of order less or equal to $N$.*

Moreover, under the assumptions of the theorem, the respective quadrature domain is determined by the moments $a_{mn}$, $m, n \leqslant N$. The next section explains the constructive parts in this determination.

Without going into details, we only mention here that a different spectral problem, for the basic equations of planar elasticity theory, also distinguishes the class of quadrature domains among all planar domains, see [26].

## 3. The moments of quadrature domains

In this section we focus on the structure of the defining polynomial of a quadrature domain and its close relationship with the $L$-moment problem.

Let $\Omega$ be a quadrature domain of order $N$ satisfying the quadrature identity:

$$\int_{\Omega} f \, \mathrm{d}A = \sum_{k=1}^{m} \sum_{j=0}^{\nu_k - 1} c_{kj} f^{(j)}(a_k), \qquad f \in L_a^1(\Omega), \tag{6}$$

where $a_k \in \Omega$, $1 \leqslant k \leqslant m$, and $N = \nu_1 + \nu_2 + \cdots + \nu_m$. Returning to the theory of pairs of self-adjoint operators invoked before, it will be relevant to consider the following exponential transform of $\Omega$:

$$E_{\Omega}(z, \overline{w}) = \exp\left( -\frac{1}{\pi} \int_{\Omega} \frac{\mathrm{d}A\,(\zeta)}{(\zeta - z)(\overline{\zeta} - \overline{w})} \right). \tag{7}$$

This is an analytic/anti-analytic function defined for $z, w \in \mathbb{C} \setminus \overline{\Omega}$. Its Taylor expansion at infinity provides the formal transform of the moment sequence (3). For our purposes the next result is crucial. For its proof see [22].

**Theorem 3.1.** *Let $\Omega$ be a bounded planar domain with exponential transform (7). Then $\Omega$ is a quadrature domain if and only if there exists a polynomial $p(z)$ with the property that the function $q(z, \overline{w}) = p(z)\overline{p(w)}E_\Omega(z, \overline{w})$ is polynomial at infinity.*

*In that case, by choosing $p(z)$ of minimal degree, the equation of $\Omega$ is, up to a finite set, $\Omega = \{z \in \mathbb{C}; q(z, \overline{z}) < 0\}$.*

Moreover, the polynomial $p(z)$ appearing above is precisely

$$p(z) = \prod_{k=1}^{m} (z - a_k)^{\nu_k},$$

hence of degree $N$, while $q(z, \overline{w})$ has degree $N$ in each variable.

Therefore we are led to the following reconstruction algorithm for a quadrature domain $\Omega$.

**Algorithm 1.** *(The exact reconstruction of a quadrature domain from a part of its moments.)*

*(1) Suppose that the moments $a_{mn}$, $m, n \leqslant N - 1$, and the quadrature nodes $a_k$, each of multiplicity $\nu_k$, $1 \leqslant k \leqslant m$, are given.*

*(2) Form the product of formal series:*

$$R(z, \overline{w}) = p(z)\overline{p(w)} \exp\left( -\frac{1}{\pi} \sum_{i,j=0}^{N-1} a_{ij} \frac{1}{z^{i+1}} \frac{1}{\overline{w}^{j+1}} \right). \tag{8}$$

*(3) Identify $q(z, \overline{w})$ as the part of $R(z, \overline{w})$ which does not contain negative powers of $z$ or $\overline{w}$:*

$$R(z, \overline{w}) - q(z, \overline{w}) \equiv 0 \qquad mod\ (z^{-1}, \overline{w}^{-1}).$$

*The minimal defining equation of $\Omega$ will, in this case, be $q(z, \overline{z}) < 0$.*

Note that the exponential expression in equation (8) comes from the power series expansion of the integrand in formula (7).

The last section will contain some simple illustrations of this algorithm.

Suppose now that the moments $a_{mn}$, $m, n \leqslant N$, are given, with their exponential transform $b$ satisfying $\det(b_{mn})_{m,n=0}^{N} = 0$, so that the integer $N$ is minimal with this property (i.e. $\det(b_{mn})_{m,n=0}^{N-1} \neq 0$). Then there are coefficients $c_k$, $0 \leqslant k \leqslant N - 1$, with the property that, for all $0 \leqslant m \leqslant N$, we have

$$b_{Nm} + c_{N-1} b_{N-1,m} + \cdots + c_0 b_{0m} = 0.$$

Then the minimal polynomial $p(z)$ vanishing at the quadrature nodes is precisely

$$p(z) = z^N + c_{N-1} z^{N-1} + \cdots + c_0.$$

At this point the above algorithm is again applicable. For details the reader can consult [12, 23] where all these results are explicitly or implicitly proved.

Actually, more can be said about the structure of the moment bi-sequence of a quadrature domain. In total analogy with the connection between Gaussian cubature on the line and self-adjoint Jacobi matrices we reproduce below from [23] the matrix counterpart of the above results.

Namely, for a quadrature domain $\Omega$ of order $N$, with minimal polynomial $p(z)$ and exponential transform $E_\Omega$, as above, there exists an $N \times N$ complex matrix $U$, such that $U^*$ admits a cyclic vector $\xi \in \mathbb{C}^N$, with the property

$$E_\Omega(z, \overline{w}) = 1 - \langle (U^* - \overline{w})^{-1}\xi, (U^* - \overline{z})^{-1}\xi \rangle, \qquad |z|, |w| \gg 0. \tag{9}$$

Thus the transformed moment sequence is

$$b_{mn} = \langle U^m U^{*n}\xi, \xi\rangle, \qquad m, n \in \mathbb{N},$$

and moreover the quadrature identity becomes

$$\int_\Omega f \,\mathrm{d}A = \langle f(U)\xi, \xi\rangle, \qquad f \in L^1_a(\Omega).$$

Consequently, $p(z)$ is the minimal polynomial of the matrix $U$, while the defining function of the quadrature domain is $\Omega = \{z;\ \|(U^* - \overline{z})^{-1}\xi\|^2 > 1\}$. Further details about these results can be found in [22, 23].

## 4. General domains

Leaving the territory of quadrature domains, we are faced with a series of conjectures and partial results. We propose below a reconstruction algorithm and give rigorous proofs only for a slightly weaker form of it. However, it is worth mentioning that the approximation scheme we discuss in this section seems to work well numerically on more general convex domains, cf [14].

Of course, a truncated series of moments does not determine in general the underlying domain. The best results one can expect are error bounds for approximations of this domain. Probably the most famous error bound in one variable is Chebyshev's inequality in probability theory. Its higher degree analogues, the Chebyshev–Markov inequalities, are also well known. Higher-dimensional analogues of these inequalities and their relevance to mathematical statistics are amply commented on in [17].

The following result was proved in [10].

**Theorem 4.1.** *Let $\Omega$ be an arbitrary bounded domain in $\mathbb{C}$. Then there exists a sequence $(\Omega_j)_{j=0}^\infty$ of quadrature domains which converges in the Hausdorff topology to $\Omega$.*

In particular, for fixed natural numbers $m, n$, we have

$$\lim_{j\to\infty} \int_{\Omega_j} z^m \overline{z}^n \,\mathrm{d}A\,(z) = \int_\Omega z^m \overline{z}^n \,\mathrm{d}A\,(z).$$

Although for applications the gap in the Hausdorff distance is the relevant quantity, the moments are well behaved under much weaker gap distances, such as the area of the symmetric difference of two domains. We note below a useful estimate in this direction. We denote by dist $(z, \Omega)$, the Euclidean distance between the point $z$ and the domain $\Omega$.

**Lemma 4.2.** *Let $\Omega$ be a domain contained in the ball centred at zero, of radius $r$. Then the exponential transform of $\Omega$, with coefficients $(b_{mn})_{m,n=0}^\infty$, satisfies*

$$|E_\Omega(z, \overline{w}) - 1| \leqslant \frac{\mathrm{Area}(\Omega)}{\pi\,\mathrm{dist}(z, \Omega)\mathrm{dist}(w, \Omega)}, \qquad z, w \in \mathbb{C} \setminus \overline{\Omega}, \tag{10}$$

*and*

$$|b_{mn}| \leqslant \frac{\mathrm{Area}(\Omega) r^{m+n}}{\pi}, \qquad m, n \geqslant 0. \tag{11}$$

**Proof.** Let $T$ be the irreducible hyponormal operator of rank-one self-commutator $[T^*, T] = \xi \otimes \xi$ with principal function equal to the characteristic function of $\Omega$. As is well known, then

$$E_\Omega(z, \overline{w}) = 1 - \langle (T^* - \overline{w})^{-1}\xi, (T^* - \overline{z})^{-1}\xi\rangle, \qquad z, w \in \mathbb{C} \setminus \overline{\Omega}.$$

Since $\|\xi\|^2 = \frac{\text{Area}(\Omega)}{\pi}$ and, due to the hyponormality of $T$,

$$\|(T^* - \overline{z})^{-1}\xi\| \leqslant \|(T - z)^{-1}\xi\| \leqslant \frac{\|\xi\|}{\text{dist}(z, \Omega)},$$

the first estimate follows.

For the second estimate we remark that

$$b_{mn} = \langle T^{*n}\xi, T^{*m}\xi\rangle$$

and again by the hyponormality of $T$, the spectral radius equals the norm, so that $\|T\| \leqslant r$.

For details about hyponormal operators we refer the reader to [19]. □

From the perturbation (presence of noise) point of view, lemma 4.2 has the following simple but important consequence: in spite of their nonlinear nature, the coefficients of the exponential transform of the moment sequence depend linearly on the symmetric difference of the domain and its perturbation.

**Corollary 4.3.** *Let $\Omega_1 \subset \Omega_2$ be two domains which are relatively compact in the unit disc. There exists a constant $C = C(\Omega_2)$ with the property that the Taylor coefficients of the respective exponential transforms satisfy*

$$|b_{mn}(\Omega_1) - b_{mn}(\Omega_2)| < C\text{Area}(\Omega_2 \setminus \Omega_1), \qquad m, n \geqslant 0. \tag{12}$$

**Proof.** Let $r < 1$ be so that $\Omega_2$ is contained in the disc of centre 0 and radius $r$. Let $\Omega = \Omega_2 \setminus \Omega_1$. Since

$$E_{\Omega_1} - E_{\Omega_2} = E_{\Omega_1}(1 - E_\Omega),$$

we can apply lemma 4.2. Note that, for all $m, n \geqslant 0$, $|b_{mn}(\Omega_1)| \leqslant r^{m+n}$. Thus the constant $C$ has the form

$$C = \max_{m,n\geqslant 0} \frac{(m+1)(n+1)r^{m+n}}{\pi}.$$

□

Next we focus on a particular class of domains, well suited for an application of certain classical facts from rational approximation theory. Namely, we assume that $\Omega$ is a bounded domain with real analytic smooth boundary. In this situation we know that the exponential transform extends analytically across the boundary, in each variable, up to an inner subset $K$, compact in $\Omega$, see [11]. We will assume, without requiring a minimality condition, that $K$ has a piecewise smooth boundary.

Let us recall the notion of logarithmic capacity of a compact set $K$ of the complex plane. If $I(\sigma) = \int \log|z - w|\, \mathrm{d}\sigma(z)\, \mathrm{d}\sigma(w)$ is the energy of the equilibrium measure $\sigma$ of $K$, then the capacity of $K$ is the number

$$c(K) = \mathrm{e}^{I(\sigma)},$$

with the convention that $\mathrm{e}^{-\infty} = 0$. The capacity of a compact set $K$ can be computed, for instance, from the Green function of the unbounded connected component of $K$, or from the conformal map of the disc onto the same component, etc. For details about capacity the reader can consult, for instance, chapter 5 of [27].

For a set $A$ and a radius $r$ we define

$$A_r = \{z \in \mathbb{C}; \text{dist}(z, A) < r\}.$$

We will state our main result in two stages, corresponding to two rather different choices of the approximation nodes. As we shall see, not unrelated to the Padé approximation techniques in the complex plane, the choice of these nodes is the main point in the proofs.

**Theorem 4.4.** *Let $\Omega$ be a bounded domain with smooth real analytic boundary and let $K \subset \Omega$ be a compact subset with capacity $0 < c(K) < \mathrm{dist}(K, \partial\Omega)$. Assume that the exponential transform $E_\Omega$ extends analytically in each variable from the complement of $\Omega$ to the complement of $K$, to a function still denoted by $E_\Omega$.*

*For every positive integer $n$ there is a monic polynomial $p_n(z)$ with zeroes in $K$ with the following approximation property. Let the polynomial $q_n(z, \overline{w})$ be determined by*

$$q_n(z, \overline{w}) \equiv p_n(z)\overline{p_n(w)}E_\Omega(z, \overline{w}) \qquad \mathrm{mod}\left(\frac{1}{z}, \frac{1}{\overline{w}}\right). \tag{13}$$

*Then for every $R$, $1 < R < \frac{\delta}{c}$, there exists a constant $C = C_R$, with the property that, for all $z \in \mathbb{C} \setminus K_\delta$ and all $n \geqslant 1$, we have*

$$\left|E_\Omega(z, \overline{z}) - \frac{q_n(z, \overline{z})}{|p_n(z)|^2}\right| \leqslant CR^{-n}. \tag{14}$$

The proof will show that the sequence of rational fractions $\frac{q_n(z,\overline{w})}{p_n(z)\overline{p_n(w)}}$ converges uniformly to $E_\Omega$ in compact subsets of $(\mathbb{C} \setminus K)^2$. Since $E_\Omega(z, \overline{z})$ is a defining function for $\partial\Omega$, the domains

$$U_n = \{z \in \mathbb{C} \setminus K; q_n(z, \overline{z}) < 0\}$$

will approximate $\Omega \setminus K$.

In the more restrictive case of simply connected domains, some other choice of the polynomials $p_n$ is available. Actually in this situation we will be able to fix the nodes, identified with the zeros of a polynomial $p$, and simply increase their multiplicity, specifically $p_n(z) = p(z)^n$.

**Theorem 4.5.** *Let $\Omega$ be a simply connected domain with smooth real analytic boundary. Choose a polynomial $p(z)$ and a constant $c < 1$, so that $|p(z)| \geqslant 1, z \in \mathbb{C} \setminus \Omega$, and so that the exponential kernel $E_\Omega$ extends analytically to the complement of the set $K = \{z \in \Omega; |p(z)| \leqslant c\}$.*

*For every $\delta < \mathrm{dist}(K, \partial\Omega)$, there are constants $C, R > 1$, so that $p_n(z) = p(z)^n$ and the polynomials $q_n$ determined by (13) satisfy*

$$\left|E_\Omega(z, \overline{z}) - \frac{q_n(z, \overline{z})}{|p_n(z)|^2}\right| \leqslant CR^{-n} \tag{15}$$

*for all $z \in \mathbb{C} \setminus K_\delta$.*

Note that for any domain $\Omega$ with smooth real analytic boundary, a subdomain $K$, as in the statement, always exists, see [11]. Indeed, by approximating by polynomials a conformal map of $\Omega$ onto the unit disc one finds a polynomial $p(z)$ with $\inf_{z\in\mathbb{C}\setminus\Omega} |p(z)| = 1$, while the set $K$ is as close to $\Omega$ as is needed for the analytic continuation requirement of $E_\Omega$. Even for a prescribed subdomain $K$, one can find similarly a polynomial $p$ whose sub-level sets $\{z \in \mathbb{C}; |p(z)| < \mathrm{const}\}$ separate $K$ from $\partial\Omega$. See also the Hilbert Lemniscate theorem in [27], theorem 5.5.8.

The proofs will rely on known facts from rational approximation theory, plus specific features of the exponential kernel, as exposed in [11].

We say after [8], section 2.2, that a sequence of monic polynomials $p_n$ of degree $n$ has equidistributed zeros in $K$, see [8], section 2.2, if

$$\lim_{n\to\infty} (\sup_{z\in K} |p_n(z)|)^{\frac{1}{n+1}} = c(K). \tag{16}$$

This limit is the minimum value among all sequences of monic polynomials. By taking the logarithm of (16) one sees that the zeros of $p_n(z)$, each charged with the weight $\frac{1}{(n+1)}$, should approximate the equilibrium measure $\sigma$.

Classical results due to Féjer and Fekete indicate that there are a couple of natural choices of such polynomials $p_n$, cf [8] theorems 2.2.3 and 2.2.4.

The next result is an independent one-complex variable approximation lemma for Cauchy integrals. Without aiming at the most general form, we state it as a necessary step in the proofs of the above theorems. Although slightly changed by the adaptation to the one-variable framework, the notation below is similar to that of theorems 4.4 and 4.5. We hope this will produce no confusion in the reader.

**Proposition 4.6.** *Under the assumptions of theorem 4.4, let $\nu$ be a complex measure supported by $K$ and let $p_n$ be a sequence of monic polynomials satisfying condition (16). For any $1 < R < \frac{\delta}{c(K)}$ we have, for $n$ large enough:*

$$\left| \int_K \frac{\mathrm{d}\nu\,(u)}{u-z} - \frac{q_n(z)}{p_n(z)} \right| \leqslant \|\nu\| R^{-n-1}, \qquad z \in \mathbb{C} \setminus K_\delta, \tag{17}$$

*where $\|\nu\|$ is the total variation of $\nu$ and the rational function $\frac{q_n}{p_n}$ is determined by the algebraic condition*

$$p_n(z) \int_K \frac{\mathrm{d}\nu\,(u)}{u-z} \equiv q_n(z) \qquad \mathrm{mod}\left(\frac{1}{z}\right). \tag{18}$$

**Proof.** Fix $z \in \mathbb{C} \setminus K_\delta$. We start by remarking that

$$p_n(z) \int_K \frac{\mathrm{d}\nu\,(u)}{u-z} = \int_K \frac{(p_n(z) - p_n(u))\,\mathrm{d}\nu\,(u)}{u-z} + \int_K \frac{p_n(u)\,\mathrm{d}\nu\,(u)}{u-z},$$

and the latter integral can be expressed by a convergent power series at infinity in $\frac{1}{z}$. Hence $q_n(z)$ equals the first integral above. Thus, we are led to estimate the expression

$$\int_K \frac{p_n(u)\,\mathrm{d}\nu\,(u)}{p_n(z)(u-z)}.$$

Choose $c < \delta_1 < \delta$ and take $R = \frac{\delta}{\delta_1}$. According to relation (16), there exists $n_0$ with the property that, for all $n \geqslant n_0$, we have

$$|p_n(u)| \leqslant {\delta_1}^{n+1}, \qquad u \in K.$$

On the other hand, since $p_n$ is a monic polynomial,

$$|p_n(z)| \geqslant \mathrm{dist}(z, K)^n \geqslant \delta^n.$$

These two estimates give the desired bound in the error integral above. □

At this point we return to the exponential kernel of $\Omega$, using as a main reference the notations and facts from [11]. In addition to $E_\Omega$ we consider the kernel

$$H_\Omega(z, \overline{w}) = -\frac{\partial^2}{\partial \overline{z} \partial w} \exp\left( -\frac{1}{\pi} \int_\Omega \frac{\mathrm{d}A\,(\zeta)}{(\zeta - z)(\overline{\zeta} - \overline{w})} \right), \qquad z, w \in \Omega,$$

which is analytic in $z$ and $\overline{w}$. Whenever the domain $\Omega$ possesses a smooth real analytic boundary, the exponential transform $E_\Omega$ extends analytically in each variable from the exterior of $\Omega$ across its boundary. In this respect we recall the following result, contained in [11], which explicitly describes such an analytic extension.

**Proposition 4.7.** *Let $\Omega$ be a bounded domain and assume that there exists a signed measure $\mu$, supported by a compact subset $K$ of $\Omega$, with the property that the Cauchy transforms $\hat{\chi}_\Omega$ and $\hat{\mu}$ coincide on $\mathbb{C} \setminus \Omega$.*

*Then the exponential transform $E_\Omega$ extends analytically/anti-analytically in each variable from $\mathbb{C} \setminus \overline{\Omega}$ to $\mathbb{C} \setminus K$ and the extension $E$ is given by the integral formula*

$$E(z, \overline{w}) = 1 - \frac{1}{\pi^2} \int_K \int_K \frac{H_\Omega(u, \overline{v})\, \mathrm{d}\mu\,(u)\, \overline{\mathrm{d}\mu\,(v)}}{(u - z)(\overline{v} - \overline{w})}, \qquad z, w \in \mathbb{C} \setminus K. \quad (19)$$

**Proof of theorem 4.4.** With the notation above we can write

$$E(z, \overline{w}) = 1 - \frac{1}{\pi^2} \int_K \int_K \frac{H_\Omega(u, \overline{v})\, \mathrm{d}\mu\,(u)\, \overline{\mathrm{d}\mu\,(v)}}{(u - z)(\overline{v} - \overline{w})}, \qquad z, w \in \mathbb{C} \setminus K.$$

By choosing the polynomial $p_n$ as in proposition 4.6, we remark that the polynomial $q_n(z, \overline{w})$ is precisely

$$q_n(z, \overline{w}) = p_n(z)\overline{p_n(w)} - \frac{1}{\pi^2} \int_K \int_K \frac{H_\Omega(u, \overline{v})(p_n(z) - p_n(u))(\overline{p_n(w)} - \overline{p_n(v)})\, \mathrm{d}\mu\,(u)\, \overline{\mathrm{d}\mu\,(v)}}{(u - z)(\overline{v} - \overline{w})}.$$

Indeed, each factor of the form $\frac{p_n(z) - p_n(u)}{u - z}$ is polynomial in both variables $(u, z)$. Thus $q_n(z, \overline{w})$ above is an explicit form of the polynomial $q_n$ defined in the statement of theorem 4.4.

By leaving the constants aside, and denoting for simplicity complex conjugation by $\overline{a} = a^*$ and $p = p_n$, we have to estimate the difference

$$\begin{aligned}\int_{K \times K} & \frac{H(u, v^*)\, \mathrm{d}\mu\,(u)\, \mathrm{d}\mu\,(v)^*}{(u - z)(v - w)^*} \\ & - \int_{K \times K} \frac{H(u, v^*)(p(z) - p(u))(p(w) - p(v))^*\, \mathrm{d}\mu\,(u)\, \mathrm{d}\mu\,(v)^*}{p(z)(u - z)p(w)^*(v - w)^*} \\ & = \int_{K \times K} \frac{H(u, v^*)}{(u - z)(v - w)^*} \left[ \frac{p(u)}{p(z)} + \frac{p(v)^*}{p(w)^*} - \frac{p(u)p(v)^*}{p(z)p(w)^*} \right] \mathrm{d}\mu\,(u)\, \mathrm{d}\mu\,(v)^*.\end{aligned}$$

Thus a repeated use of the proof of proposition 4.6 yields the estimate (14).

The proof of theorem 4.5 is entirely similar. With the notation in the statement it suffices to remark that the estimate

$$\frac{|p(u)|}{|p(z)|} \leqslant \frac{c}{(c + \epsilon)}, \qquad u \in K, \qquad \mathrm{dist}(z, K) > \delta,$$

holds, with $\epsilon = \inf_{z \in \Omega \setminus K_\delta} |p(z)| - c > 0$. However, as we have pointed out before, the choice of the polynomial $p$ is, in this case, not constructive.

**Remarks.** (a) The proofs above show that the capacity condition in theorem 4.4 can be replaced by

$$\mathrm{diam}(K) < \mathrm{dist}(K, \partial\Omega). \quad (20)$$

And in this case any choice of a polynomial $p_n(z)$ with zeros in $K$ is good.

(b) Assuming that $\Omega$ and $K$ are convex, a natural choice for $p_n$ would, in this case, be the orthogonal polynomial of degree $n$, with respect to the area measure on $K$. Indeed, if $K$ is convex, then by Fejér's theorem the zeros of such $p_n$ are contained in the $K$, see [8], theorem 1.1.

(c) Variations on the proof of theorem 4.5 give good estimates as in formula (15) on smooth real analytic arcs of the boundary of $\Omega$, even if the domain has singularities in other parts of

the boundary. The polynomial $p(z)$ will, in this case, be chosen with respect to such a local focus on $\partial\Omega$. We do not expand on these details here.

As a partial conclusion of the above facts, we state below a reconstruction algorithm based on remark (b).

**Algorithm 2.** *(Approximate reconstruction of a class of convex domains with real smooth analytic boundary from a part of their moments.)*

*Start with the known sequence* $(a_{kl})_{k,l=0}^{N}$ *of moments. Centre the moments to* $a_{1,0} = a_{0,1} = 0$.

*(1) Compute recurrently the coefficients* $b_{pq}$, $p \leqslant N$, $q \leqslant N$, *of the exponential transform of the moment sequence (cf formula (3)).*

*(2) Fix a constant* $\rho < 1$. *Find the monic orthogonal polynomial* $p(z) = z^N + c_{N-1}z^{N-1} + \cdots + c_0$ *whose coefficients satisfy the linear system*

$$-\rho^{N+k}a_{N,k} = c_{N-1}\rho^{N+k-1}a_{N-1,k} + \cdots + c_0\rho^k a_{0,k} \qquad 0 \leqslant k < N.$$

*(3) Identify* $q(z, \overline{w})$ *as the part of*

$$R(z, \overline{w}) = p(z)\overline{p(w)} \sum_{i,j=0}^{N-1} b_{ij} \frac{1}{z^{i+1}\overline{w}^{j+1}}$$

*which does not contain negative powers of* $z$ *or* $\overline{w}$.

*Then* $\Omega \approx \{z \in \mathbb{C};\, q(z, \overline{z}) < 0\}$.

In view of theorem 4.4 and the remark above, the algorithm converges exponentially as soon as the 'balayage inward' process of $\partial\Omega$ can be pushed enough to be contained in the homothetic set $\rho\Omega$ and the latter satisfies $\rho \operatorname{diam} \Omega < \operatorname{dist}(\rho\Omega, \partial\Omega)$. By 'balayage inward' of a domain $\Omega$ with real analytic boundary, we mean the possibility of analytically extending its Cauchy transform, from outside, up to an inner closed set $K \subset \Omega$, as in proposition 4.7 above.

An example in this respect is a family of confocal ellipses, see [5]. For geophysical applications this can be translated into the fact that the boundary of the respective domain (in the inverse source problem) is far enough from the source.

**Remark.** Step (2) in the preceding algorithm can be replaced by other choices of the polynomial $p$. A natural candidate would be a solution of the variational problem

$$m = \min \sum_{i,j=0}^{N} d_i b_{ij} \overline{d_j} = \sum_{i,j=0}^{N} c_i b_{ij} \overline{c_j},$$

the minimum being considered over all systems $(d_j)$, $0 \leqslant j < N$, of complex numbers, with the normalization $d_N = c_N = 1$.

In this way algorithm 2 becomes exact on all quadrature domains. Indeed, first note that the matrix $(b_{ij})$ is always non-negative definite, and second, $\Omega$ is a quadrature domain of order $N$ if and only if the above minimum is zero. Then the only choice of $p(z)$ is the solution of the above variational problem, cf section 3 of this paper. As a matter of fact, the minimum $m$ above has a simple Hilbert space interpretation:

$$m = \operatorname{dist}(T^{*N}\xi, \vee_{d<N} T^{*d}\xi),$$

where $T$ is the unique hyponormal operator of rank one self-commutator, $[T^*, T] = \xi \otimes \xi$, with principal function equal to the characteristic function of the set $\Omega$. Or equivalently, $m$ is

the norm of the monic orthogonal polynomial of degree $N$, with respect to a scalar product given by the kernel $H_\Omega$. For details see [11, 23].

This particular choice of the polynomials $p_n$ can be related to a diagonal Padé approximation of the exponential transform $E_\Omega$, and further to a canonical approximation of the hyponormal operator $T$ which appears in the factorization of $E_\Omega$ (such as in the proof of lemma 4.2). These aspects will be expanded in a separate paper [25].

## 5. Applications

Numerous applications of the problem of shape-from-moments exist in diverse areas such as probability and statistics [6], computed tomography [20], and inverse potential theory [9,21]. In statistical applications, timeseries data may be used to estimate the moments of the underlying density, from which an estimate of this probability density may be sought. In computed tomography, the x-rays of an object can be used to estimate the moments of the underlying mass distribution, and from these the shape of the object being imaged may be estimated [16, 20]. Also, in geophysical applications, the measurements of the exterior gravitational field of a region can be readily converted into moment information, and from these, the (polygonal) shape of the region may be determined [9]. In this section we briefly discuss the tomographic and geophysical reconstruction problems in light of the above results. More details about the connection between moment reconstruction and tomography can be found in [16] and [20]. We use the notation of the latter reference.

### *5.1.*

In this section we work with real variables $x$, $y$, so that $z = x + \mathrm{i}y$ and the transition to complex variables $z$, $\bar{z}$ is simple. We denote by $\delta$ Dirac's distribution of a point or of a submanifold. Let $\Omega$ be a bounded planar domain and let

$$\mu_{mn} = \int_\Omega x^m y^n \,\mathrm{d}x\,\mathrm{d}y,$$

be its moment sequence. Let $t$ be a positive integer and let $\theta \in [0, \pi)$. The Radon transform of the domain $\Omega$ is the function

$$g_\Omega(t, \theta) = \int_\Omega \delta(t - x\cos\theta - y\sin\theta)\,\mathrm{d}x\,\mathrm{d}y.$$

We interpret $g_\Omega$ as the projection of $\Omega$ at the angle $\theta$. Let $T$ be a positive constant and let $F \in L^2([-T, T], \mathrm{d}t)$. Accordingly, the definition of $g_\Omega$ yields

$$\int_{-T}^{T} g_\Omega(t, \theta) F(t)\,\mathrm{d}t = \int_\Omega F(x\cos\theta + y\sin\theta)\,\mathrm{d}x\,\mathrm{d}y.$$

By taking $F(t) = t^n$ and expanding the second integral by the binomial formula we obtain

$$\int_{-T}^{T} g_\Omega(t, \theta) t^n\,\mathrm{d}t = \sum_{k+l=n} \binom{n}{k} \cos^k(\theta)\sin^l(\theta)\mu_{kl}.$$

Thus, knowing the projection $g_\Omega$ at the angle $\theta$, and hence its moments, one knows the above linear combinations among the moments $\mu_{kl}$. Since the determinant of these linear combinations for different angles $\theta$ is non-zero, the following observation holds (as noted in [20], proposition 3): *given line integral projections of the domain $\Omega$ at $d+1$ distinct angles, one can determine all the moments $\mu_{k,l}$ of order $k + l \leqslant d$.* As a consequence, taken with our earlier results and proposed algorithms, we have:

**Theorem 5.1.** *Let $\Omega$ be a quadrature domain of order $d$. The line integral projections $g_\Omega(t, \theta_j)$ at $2d + 1$ distinct angles $\theta_j$, $0 \leqslant j \leqslant 2d$, uniquely determines $\Omega$.*

This also gives a simple way of deciding from tomographic data when a domain $\Omega$ is a quadrature domain of order $d$.

Thus (as is well known) a disc of uniform mass is determined by exactly three line integral projections; more interestingly, a cardioid or a lemniscate (which are quadrature domains of order 2) need five projections, etc.

For a theoretical discussion of the convergence of the reconstruction process from finitely many projections, within the framework of the theory of the Radon transform, the reader can also consult [15].

*5.2.*

Of related interest is the inverse problem for the logarithmic potential, or the Cauchy transform, of a planar domain, see for instance [21]. We do not touch this vast territory here, but simply mention that, knowing the Cauchy transform $F(z)$ of a bounded domain $\Omega \subset \mathbb{C}$:

$$F(z) = -\frac{1}{\pi} \int_\Omega \frac{\mathrm{d}A\,(w)}{w - z}, \qquad z \in \mathbb{C} \setminus \overline{\Omega},$$

a part of the exponential transform $E_\Omega$, see (7), is known. More precisely,

$$F(z) = \lim_{w \to \infty} \overline{w}(1 - E_\Omega(z, \overline{w})).$$

Thus, knowing $F(z)$ for $z$ large, gives important information about $E_\Omega$, and consequently about $\Omega$. In particular, such an instance, when analytic continuation properties of $F(z)$ were exploited for proving the regularity of the boundary of $\Omega$, is analysed in [11].

On the other hand there are simple examples of continuous families of quadrature domains with the same Cauchy transform at infinity, see for instance [10]. For a general perspective on the inverse problem for the Cauchy transform, see [30].

*5.3.*

As a theoretical application of section 3 above, we can reverse algorithm 1 and obtain fast cubature formulae on quadrature domains, in the case when their defining equation is known. More details in this direction can be found in [12].

To be more specific, start with a quadrature domain $\Omega$ of order $d$ whose boundary is given by the irreducible polynomial equation $q(z, \overline{z}) = 0$, normalized so that the highest degree term in each variable separately is $z^d \overline{z}^d$. The coefficient of $\overline{z}^d$ in $q$ is then exactly the polynomial $p$ vanishing at the nodes of the quadrature identity (6). Then we can recover the moments $a_{mn}$ of $\Omega$ from the identity

$$\sum_{m,n=0}^{\infty} \frac{a_{mn}}{z^{m+1} \overline{z}^{n+1}} = -\pi \log \frac{q(z, \overline{z})}{|p(z)|^2}. \tag{21}$$

Note that the cubature process is exact, and consists entirely of formal series manipulations. A simple example will be discussed in example 6.1 below.

## 6. Numerical experiments

This section contains a few simple illustrations of the algorithms described above. More details in this direction will appear in [14].

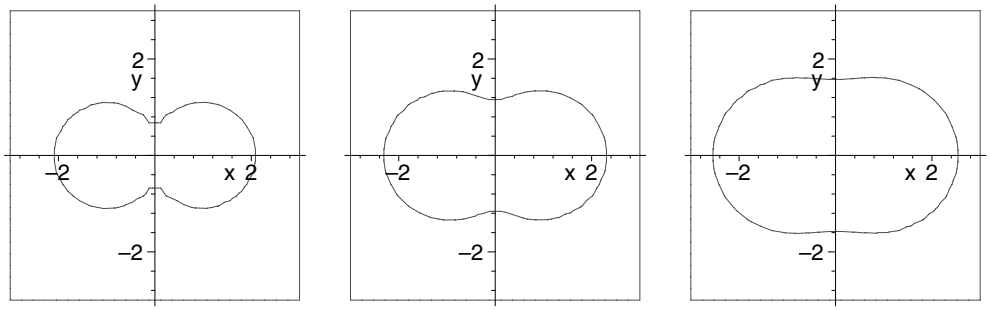


**Figure 1.** Left: $r = 1.1$; Middle: $r = 1.3$; Right: $r = 1.5$.

**Example 6.1.** Exact cubatures on a quadrature domain of order two.

Let us consider the quadrature domain $\Omega$ defined by the polynomial

$$q(z, \bar{z}) = (|z-1|^2 - r^2)(|z+1|^2 - r^2) - (1-r^2)^2,$$

where $r > 1$. The nodes of $\Omega$ are simple and they are located at $\pm 1$. By reversing the exponential transform, we want to compute exactly the moments $a_{mn}$ of $\Omega$ in small degrees: $m + n \leqslant 2$.

We will work with formal series in $\frac{1}{z}$, $\frac{1}{\bar{z}}$, and we are interested only in equality modulo polynomials of total degree greater than two, denoted below by '$\equiv$'. According to formula (21), we obtain

$$\begin{aligned}
\sum_{m+n\leqslant 2} \frac{a_{mn}}{z^{m+1}\bar{z}^{n+1}} &\equiv -\pi \log \frac{q(z,\bar{z})}{|z^2-1|^2} \\
&\equiv -\pi \log \left[ 1 - \frac{r^2}{|z-1|^2} - \frac{r^2}{|z+1|^2} + \frac{2r^2-1}{|z-1|^2|z+1|^2} \right] \\
&\equiv -\pi \log \left[ 1 - \frac{2r^2}{|z|^2} - \frac{2r^2}{z^3\bar{z}} - \frac{2r^2}{z\bar{z}^3} - \frac{1}{|z|^4} \right] \\
&\equiv \frac{2\pi r^2}{|z|^2} + \frac{2\pi r^2}{z^3\bar{z}} + \frac{2\pi r^2}{z\bar{z}^3} + \pi \frac{2r^4+1}{|z|^4}.
\end{aligned}$$

From all these simple computations we read the moments

$$a_{00} = a_{20} = a_{02} = 2\pi r^2, \qquad a_{01} = a_{10} = 0, \qquad a_{11} = \pi(2r^4+1).$$

The same procedure works for higher degree moments.

The shapes of the domains for different values of $r$ are shown in figure 1.

**Example 6.2.** Reconstruction of a square by algorithm 2.

We pretend that the unknown body is a square of size $2 \times 2$, centred at the origin. The beginning of the moment sequence is easily computable and this is our only known data. By choosing the homothety factor $\rho = 1$, we use a symbolic manipulator (Maple in this case) to implement algorithm 2 for different degrees $N$. For example, when $N = 12$, we obtain the polynomial $p(z) = z^{12} + 2.8641z^8 + 1.2301z^4 + 0.0130$. The results of the reconstructions are displayed in figures 2 and 3.

In the case considered in this experiment, the exponential transform $E_\Omega$ of the square $\Omega$ can be analytically/anti-analytically continued up to the union $K$ of the two diagonals. By

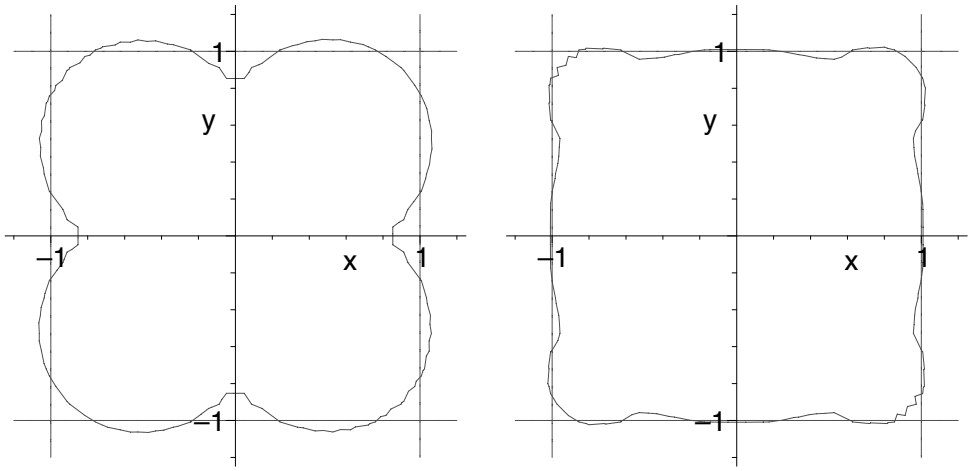


**Figure 2.** Left: $N = 4$; right: $N = 8$.

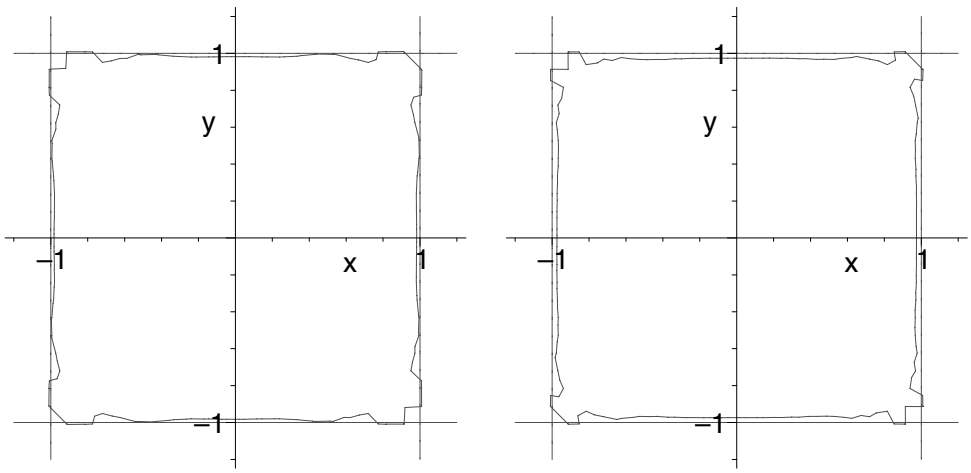


**Figure 3.** Left: $N = 12$; right: $N = 16$.

following the proof of proposition 4.6, we see that an upper bound for the error is, up to a constant,

$$\frac{\sup_{u\in K} |p_n(u)|}{|p_n(z)|},$$

where $p_n$ is a monic polynomial of degree $n$ (chosen in this case to be the complex orthogonal polynomial with respect to the area measure of the square $\Omega$) and the point $z$ is far from the set $K$.

Since the logarithmic capacity of the union of diagonals $K$ is $c(K) = \frac{\sqrt{2}}{2^{2/4}} = 1$, cf, for instance, [27], we infer that, properly choosing the polynomials $p_n$, the process converges exponentially in the region

$$\{z \in \mathbb{C}; d(z, K) > 1\},$$

which is closest to the midpoints of the four sides of $\Omega$, but relatively far from the vertices.

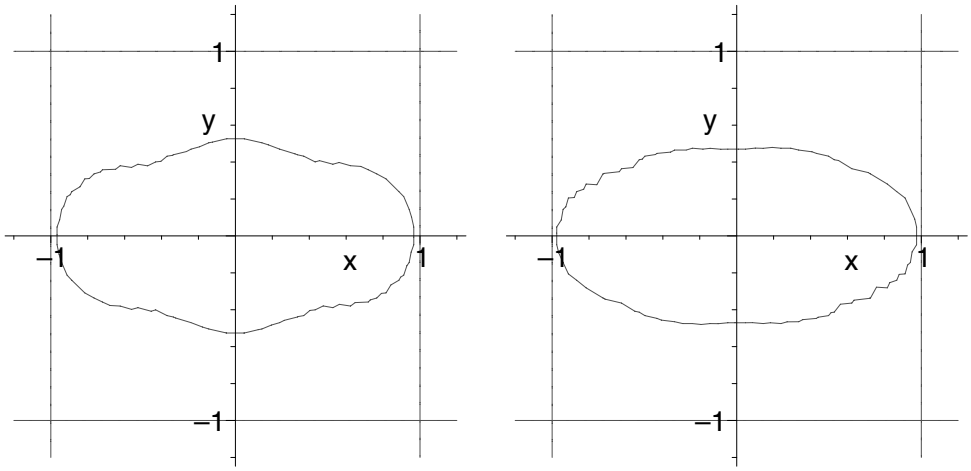


**Figure 4.** Left: $N = 3$; right: $N = 4$.

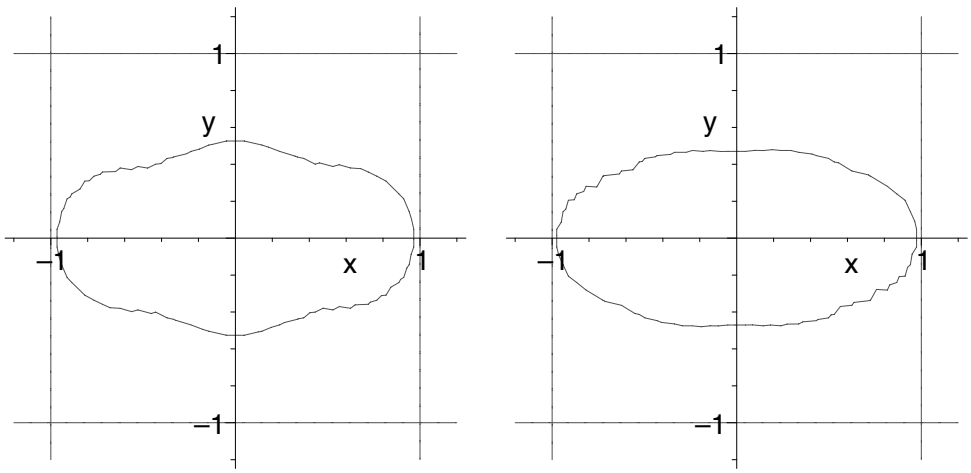


**Figure 5.** Left: $N = 5$; right: $N = 6$.

This might explain the deviation of the approximative domains in the pictures from $\Omega$, in the neighbourhoods of the four vertices.

On the other hand, some *ad hoc* computations (which we do not include here) of the error integral appearing in the proof of theorem 4.4 give more information about the error bound.

In the case of the square $\Omega$, we can also adapt theorem 4.5, by choosing a polynomial $p(z)$ whose level sets separate the diagonals $K$ from the midpoints of the four sides. Then the same exponential decay of the approximation process follows, by choosing $p_n(z) = p(z)^n$.

**Example 6.3.** Reconstruction of an ellipse by algorithm 2.

This is a totally parallel experiment to example 6.2, this time starting from the known moments of an ellipse. The case of the ellipse $\Omega$ is more fortunate, due to the existence of a generalized quadrature formula of the type

$$\int_\Omega p(z)\,\mathrm{d}A\,(z) = \text{const} \int_{-c}^{c} p(x)\sqrt{c^2 - x^2}\,\mathrm{d}x,$$

where $p(z)$ is a complex polynomial, and $\pm c$ are the two (real) foci of $\Omega$, see, for instance, [5] or [29]. Thus, in this case one can take $K = [-c, c]$, and the capacity of this interval is known to be $c(K) = \frac{c}{2}$, see [27]. Therefore, in view of theorem 4.4, the approximation process converges for points $z$ situated at a distance $> \frac{c}{2}$ from $K$. Thus, the smaller the eccentricity of $\Omega$ is, the more points of $\partial\Omega$ fall into the convergence region. Similarly, we can invoke here theorem 4.5.

In the experiments shown in figures 4 and 5 two semi-axes of the ellipse, being reconstructed with different values of $N$, have length 1, $\frac{1}{2}$, hence $c = \frac{\sqrt{3}}{2}$ and the domain

$$\left\{ z \in \mathbb{C}; d(z, [-c, c]) > \frac{\sqrt{3}}{4} \right\}$$

covers mid parts of $\partial\Omega$, symmetric with respect to the points $\pm\frac{\mathrm{i}}{2}$.

## 7. Final comments

We can draw several conclusions from the above sections.

Let $\Omega$ be a bounded planar domain. The diagonal exponential transform $E_\Omega(z, \overline{z})$ has a power series expansion at infinity which depends only on the moment sequence of $\Omega$. This function gives a natural defining equation of each real analytic part of the boundary of $\Omega$.

Hence, a suitably chosen rational approximation at infinity of the power series of $E_\Omega(z, \overline{z})$ will have a zero set close to the boundary of $\Omega$.

This process of series approximation (originally in two independent variables) can actually be reduced to a single complex variable situation (cf proposition 4.6). Then classical rational approximation methods (such as the Padé approximation, orthogonal polynomials or equidistribution of points in potential theory) can be applied.

For a quadrature domain of order $d$, a standard algorithmic choice of denominators in the rational approximation scheme leads to exact reconstruction of the domain (via its irreducible defining equation) in precisely $d$ steps. By reversing this process one can compute (algorithmically) all power moments of a quadrature domain from the coefficients of its defining equation.

By no means do the problems arising in this paper have a definite solution, nor even a final form. The difficulties encountered in the convergence proofs proposed above are of the same nature as the basic (rather delicate) problems of rational approximation theory. We hope that the continuation of this work will further exploit this connection. The note [25] is a first step in this direction.

From another point of view, in comparison and contrast to the classical theory of the Radon transform, see [15], we have used a Riesz potential at the critical exponent 2 (in real dimension 2):

$$\int_\Omega \frac{\mathrm{d}A(\zeta)}{|\zeta - z|^2},$$

which diverges at boundary points of $\Omega$. However, the negative exponential

$$E_\Omega(z, \overline{z}) = \exp\left( -\frac{1}{\pi} \int_\Omega \frac{\mathrm{d}A(\zeta)}{|\zeta - z|^2} \right)$$

renormalizes the divergence of the potential, and it turns out to vanish at the first order along the real analytic arcs of the boundary of $\Omega$. This observation was also useful in some regularity problems (of free boundaries) in fluid mechanics, see [11].

## Acknowledgments

The authors were partially supported by the National Science Foundation grants DMS-9800666 and CCR-9984246.

## References

[1] Aharonov D and Shapiro H S 1976 Domains on which analytic functions satisfy quadrature identities *J. Anal. Math.* **30** 39–73
[2] Akhiezer N I 1965 *The Classical Moment Problem and Some Related Questions in Analysis* (Edinburgh: Oliver and Boyd)
[3] Akhiezer N I and Krein M G 1990 *Some Questions in the Theory of Moments (Transl. Math. Monographs Am. Math. Soc.)* vol 2 (Providence, RI: American Mathematical Society)
[4] Carey R W and Pincus J D 1974 An exponential formula for determining functions *Indiana Univ. Math. J.* **23** 1031–42
[5] Davis Ph 1974 *The Schwarz Function and its Applications (Carus Math. Monographs)* vol 17 (Washington, DC: Mathematical Association of America)
[6] Diaconis P 1987 Application of the methods of moments in probability and statistics *Proceedings of Symposia in Applied Mathematics* vol 37 (Providence, RI: American Mathematical Society) pp 125–42
[7] Foiaş C and Frazho A E 1990 *The Commutant Lifting Approach to Interpolation Problems* (Basle: Birkhäuser)
[8] Gaier D 1980 *Vorlesungen über Approximation im Komplexen* (Basle: Birkhäuser)
[9] Golub G H, Milanfar P and Varah J 1999 A stable numerical method for inverting shape from moments *SIAM J. Sci. Comput.* **21** 1222–43
[10] Gustafsson B 1983 Quadrature identities and the Schottky double *Acta Appl. Math.* **1** 209–40
[11] Gustafsson B and Putinar M 1998 An exponential transform and regularity of free boundaries in two dimensions *Ann. Sci. Norm. Sup. Pisa* **26** 507–43
[12] Gustafsson B and Putinar M Linear analysis of quadrature domains. II *Israel J. Math.* at press
[13] Gustafsson B and Putinar M 2000 On exact quadrature formulae for harmonic functions on polyhedra *Proc. Am. Math. Soc.* **128** 1427–32
[14] He, Chiyu Moment problems and operator theory *Thesis* University of California at Santa Barbara in preparation
[15] Helgason S 1980 *Radon Transform* (Boston: Birkhäuser)
[16] Herman G T 1980 *Image Reconstruction From Projections* (New York: Academic)
[17] Karlin S and Studden W J 1966 *Tchebycheff Systems, with Applications in Analysis and Statistics* (New York: Interscience)
[18] Krein M G and Nudelman A A 1977 *Markov Moment Problem and Extremal Problems (Transl. Math. Monographs Am. Math. Soc.)* vol 50 (Providence, RI: American Mathematical Society)
[19] Martin M and Putinar M 1989 *Lectures on Hyponormal Operators* (Basle: Birkhäuser)
[20] Milanfar P, Verghese G C, Karl W C and Willsky A S 1995 Reconstructing polygons from moments with connections to array processing *IEEE Trans. Signal Proc.* **43** 432–43
[21] Parker R L 1994 *Geophysical Inverse Theory* (Princeton, NJ: Princeton University Press)
[22] Putinar M 1996 Extremal solutions of the two-dimensional $L$-problem of moments *J. Funct. Anal.* **136** 331–64
[23] Putinar M 1995 Linear analysis of quadrature domains *Ark. Mat.* **33** 357–76
[24] Putinar M 1998 Extremal solutions of the two-dimensional $L$-problem of moments II *J. Approx. Theor.* **92** 38–58
[25] Putinar M 2000 On a diagonal Padé approximation in two variables *Numer. Math.* submitted
[26] Putinar M and Shapiro H S 2000 The Friedrichs operator of a planar domain *(V S Vinogradov Memorial Volume)* ed V Havin and N K Nikolskii (Basle: Birkhäuser) p 303–30
[27] Ransford T 1995 *Potential Theory in the Complex Plane* (Cambridge: Cambridge University Press)
[28] Sakai M 1982 *Quadrature Domains (Lecture Notes in Mathematics vol 934)* (Berlin: Springer)
[29] Shapiro H S 1992 *The Schwarz Function and its Generalization to Higher Dimensions* (New York: Wiley)
[30] Varchenko A N and Etingof P I 1992 *Why the Boundary of a Round Drop Becomes a Curve of Order Four* (Providence, RI: American Mathematical Society)